Rittal spare parts

SK RTT blue e ROOF MOUNT COOLER 1000W

Model No. 3383.520

Download
(high definition)

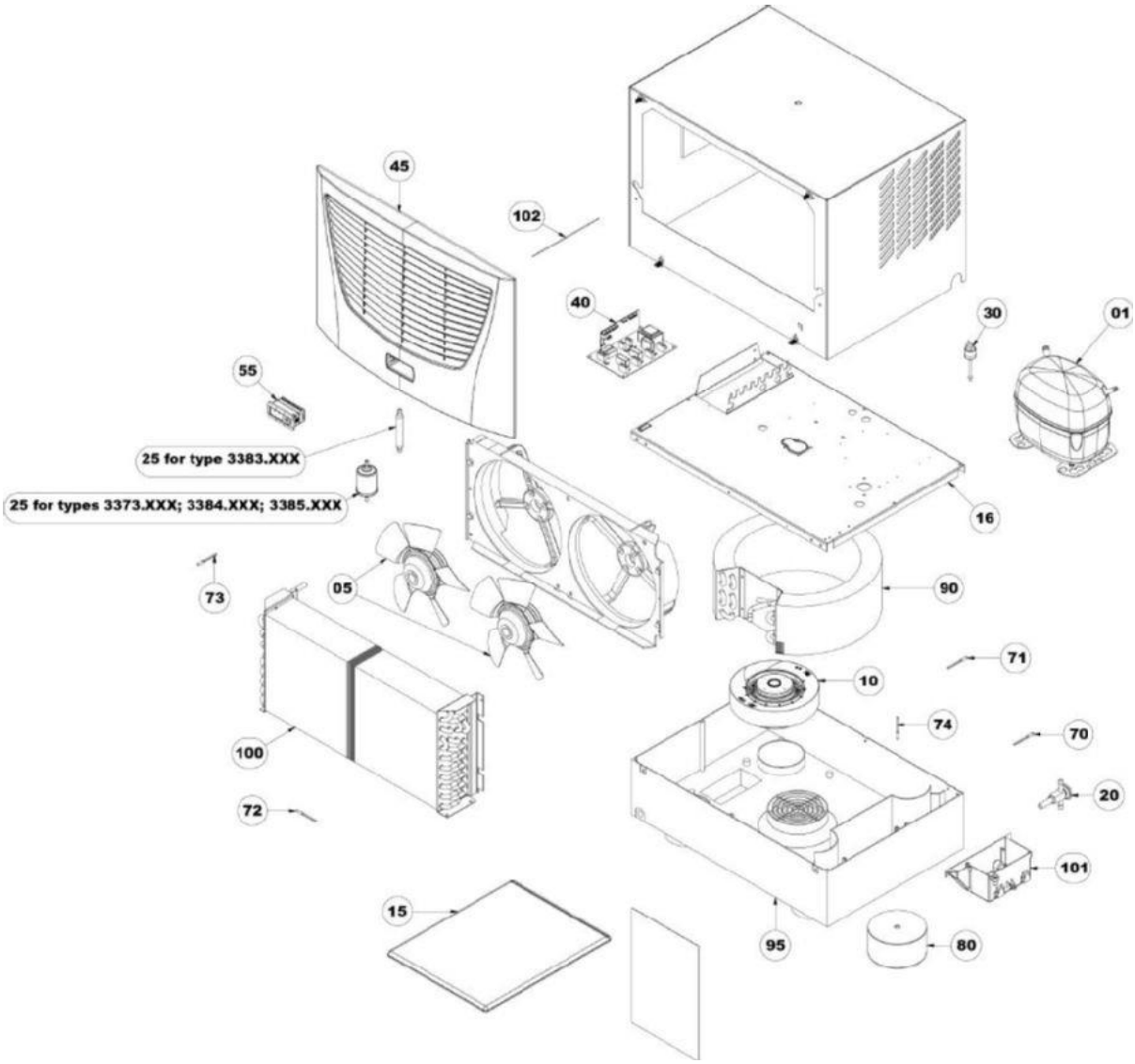

01	SK Compressor	02.08.2011 3397.731 ---- 3397.147

02	SK Starting device	3397.172 3397.174	02.08.2011	----
05	SK Axial fan	3396.657 3396.245	02.08.2011	----
10	SK Radial fan	3396.646 3396.283	02.08.2011	----
15	SK Accessory bag	3396.677	----	
16	SK Sealing plate	3397.509	----	
20	SK Expansion valve	3397.050	----	
25	SK Filter dryer	3397.048	----	
30	SK Pressostat	3397.603 3397.603	02.08.2011	----
40	SK Controller	3396.665 3396.277	02.08.2011	----
45	SK Grille	3397.528	----	
55	SK Display	3396.667 3396.281	02.08.2011	----
70	SK Temperature sensor, blue	3397.533	----	
71	SK Temperature sensor, red	3397.538	----	
72	SK Temperature sensor, yellow	3397.541	----	
74	SK Condensate sensor	3397.547	----	
75	SK Cover	3397.548	----	
90	SK Evaporator coil	3397.565	----	
100	SK Condenser	3397.581	----	

« **choose another product**