Rittal spare parts

SK RTT WALL MOUNT COOLER 1000W

Model No. 3304.100

Download
(high definition)

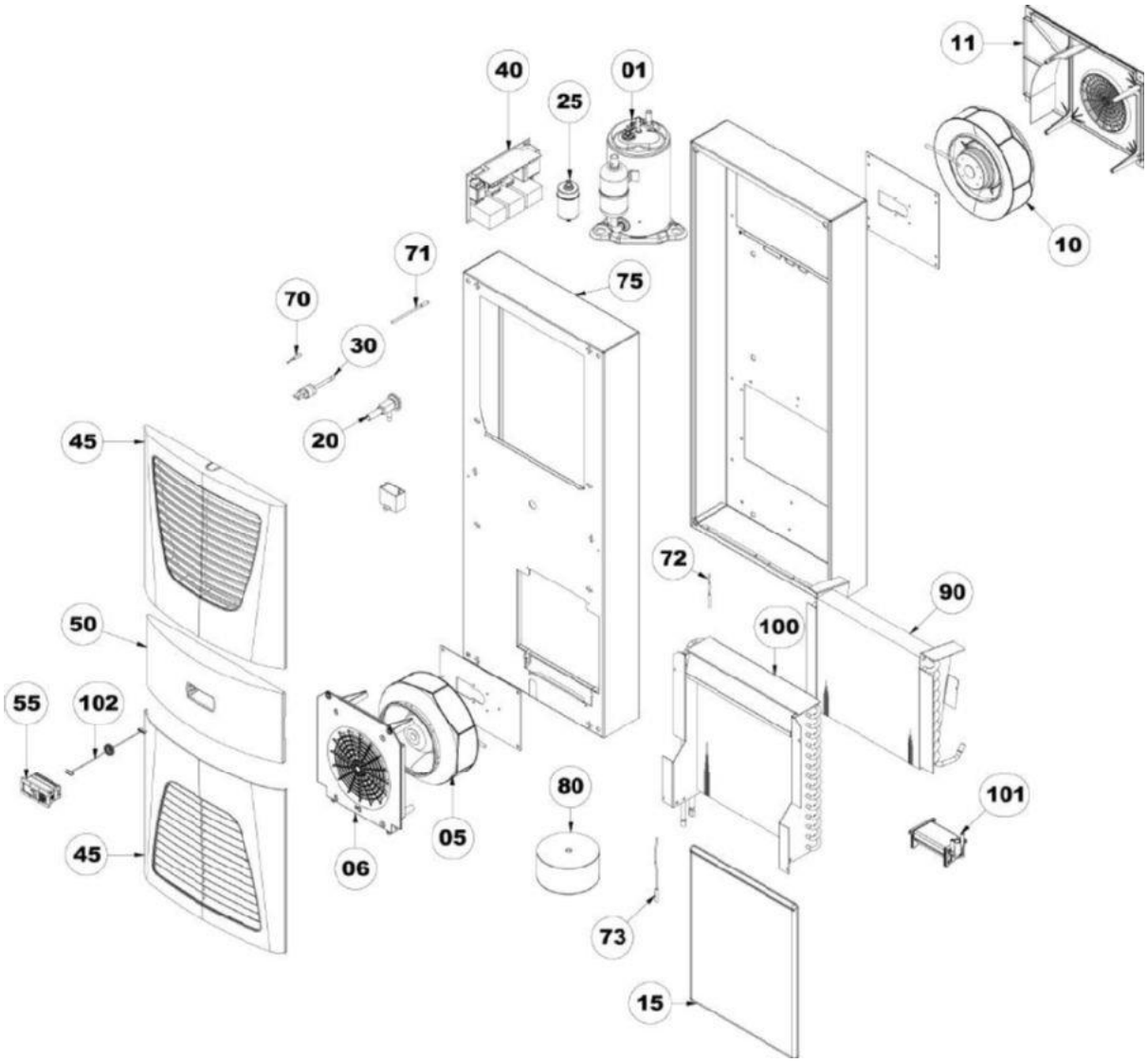

01	SK Compressor	01.10.2004	3397.668
		----	3397.488
05	SK Radial fan	----	3396.076
06	SK Fan trim panel	01.08.2010	3398.305
10	SK Radial fan	----	3396.258

11	SK Fan trim panel	01.03.2009	3396.682
15	SK Accessory bag	----	3396.670
20	SK Expansion valve	----	3397.049
25	SK Filter dryer	----	3397.048
30	SK Pressostat	----	3397.617
40	SK Controller	----	3396.279
45	SK Grille	----	3397.529
50	SK Cover	----	3397.532
55	SK Display	----	3396.282
70	SK Temperature sensor, blue	----	3397.534
71	SK Temperature sensor, red	----	3397.537
75	SK Cover	27.08.2013 ----	3398.203 3397.812
90	SK Evaporator coil	17.09.2003	3397.613
100	SK Condenser	17.09.2003	3397.614
101	SK Condensate evaporator	15.10.2009	3397.717
102	SK Display cable	----	3397.868

« **choose another product**